DA VIN CI

TORSION

D04-H09-100-**

3-HOLE DECK MOUNTED LAV FAUCET

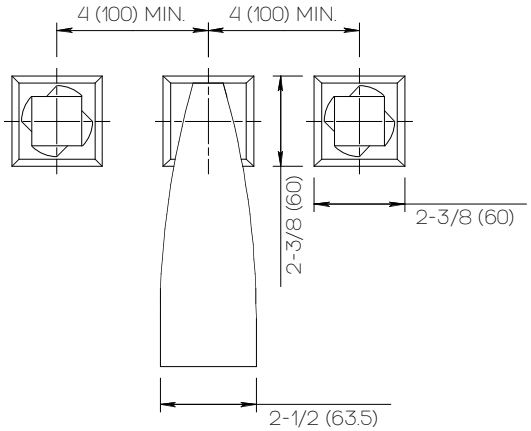

PRODUCT SPECIFICATIONS

Series	Torsion
Spout	D04
Handle	H09 (Twist)
Mounting	(3) Holes @ Ø1-3/8" (35mm)
Features	Zero-Lead Brass
	Ceramic Disc Cartridge
	1.2 gpm
	Stainless Steel Flex-Hoses

****FINISH**

Polished Chrome	PC
Polished Nickel	PN
Satin Nickel	SN
Anthracite	AN
Matte Soft Brass	MSB
Matte Black	MB
Matte White	MW

Other finishes available upon request.

DRAIN SOLD SEPARATELY

Select Drain for application

APPLICABLE CODES & STANDARDS

Specified model meets or exceeds the following:

- ASME A112.18.1/CSA B125.1
- US Federal and State material regulations.
- EPA WaterSense®

IMPORTANT

Dimensions are nominal and may vary within the range of tolerances established by ANSI Standard A112.18.1. These measurements are subject to change or cancellation. No responsibility is assumed for use of superceded or voided pages.

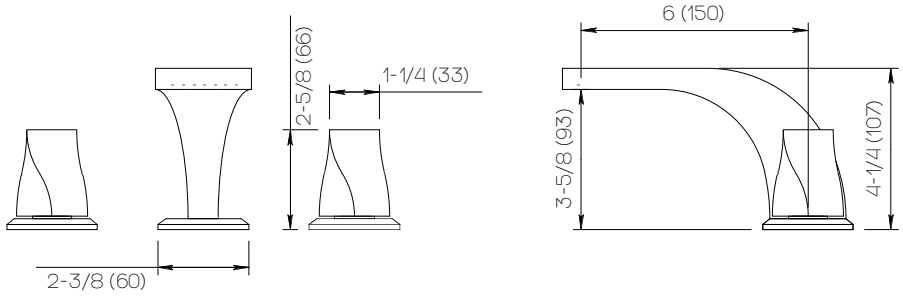

SPECIFICATION ISSUE: July 30, 2019

22 WEST 21ST STREET_5TH FLOOR_NEW YORK NY 10010
TEL 212 243 5400_FAX 212 243 2403
INFO@AFNEWYORK.COM_WWW.AFNEWYORK.COM

AF | NEW YORK